Frame B

XTPR Rotary Manual Motor Protectors with Screw Terminals—Global Ratings and North American Ratings—Frame B

Type 1 and Type 2 Coordination Motor Protective Device with Thermal and Magnetic Trip

Rated Uninterrupted Current— $I_u = I_e$ (Amps)	FLA Adjustment Range/ Overload Release— I_r (Amps)	Short Circuit Release— I_{rm} (Amps)	Maximum Motor Ratings ① Maximum kW Rating AC-3—P (kW) Three-Phase 220–240V	380–415V	440V	500V	660–690V	Maximum hp Rating—P (hp) UL 508/CSA C22.2 No. 14 Three-Phase 200V	240V	480V	600V	Screw Terminal Catalog Number
0.16	0.1–0.16	2.2	—	—	—	—	0.06	②	②	②	②	**XTPRP16BC1**
0.25	0.16–0.25	3.5	—	0.06	0.06	0.06	0.12	②	②	②	②	**XTPRP25BC1**
0.4	0.25–0.4	5.6	0.06	0.09	0.12	0.12	0.18	②	②	②	②	**XTPRP40BC1**
0.63	0.4–0.63	8.8	0.09	0.12	0.18	0.25	0.25	②	②	②	②	**XTPRP63BC1**
1	0.63–1	14	0.12	0.25	0.25	0.37	0.55	②	②	2	1/2	**XTPR001BC1**
1.6	1–1.6	22	0.25	0.55	0.55	0.75	1.1	②	②	3/4	3/4	**XTPR1P6BC1**
2.5	1.6–2.5	35	0.37	0.75	1.1	1.1	1.5	1/2	1/2	1	1-1/2	**XTPR2P5BC1**
4	2.5–4	56	0.75	1.5	1.5	2.2	3	3/4	3/4	2	3	**XTPR004BC1**
6.3	4–6.3	88	1.1	2.2	3	3	4	1	1-1/2	3	5	**XTPR6P3BC1**
10	6.3–10	140	2.2	4	4	4	7.5	3	3	7-1/2	10	**XTPR010BC1**
12	8–12	168	3	5.5	5.5	5.5	11	3	3	7-1/2	10	**XTPR012BC1**
16	10–16	224	4	7.5	9	9	12.5	3	5	10	10	**XTPR016BC1**
20	16–20	280	5.5	9	11	12.5	15	5	—	—	15	**XTPR020BC1**
25	20–25	350	5.5	12.5	12.5	15	22	—	7-1/2	15	20	**XTPR025BC1**
32	25–32	448	7.5	15	15	22	30	7-1/2	10	20	25	**XTPR032BC1**

Frame D

XTPR Rotary Manual Motor Protectors with Screw Terminals—Global Ratings and North American Ratings—Frame D

Type 1 and Type 2 Coordination Motor Protective Device with Thermal and Magnetic Trip

Rated Uninterrupted Current— $I_u = I_e$ (Amps)	FLA Adjustment Range/ Overload Release— I_r (Amps)	Short Circuit Release— I_{rm} (Amps)	Maximum Motor Ratings ① Maximum kW Rating AC-3—P (kW) Three-Phase 220–240V	380–415V	440V	500V	660–690V	Maximum hp Rating—P (hp) UL 508/CSA C22.2 No. 14 Three-Phase 200V	240V	480V	600V	Screw Terminal Catalog Number
16	10–16	224	4	7.5	9	9	12.5	3	5	10	10	**XTPR016DC1**
25	16–25	350	5.5	12.5	12.5	15	22	7-1/2	7-1/2	20	25	**XTPR025DC1**
32	25–32	448	7.5	15	17.5	22	22	10	10	25	30	**XTPR032DC1**
40	32–40	560	11	20	22	24	30	10	—	30	30	**XTPR040DC1**
50	40–50	700	14	25	30	30	45	—	15	30	40	**XTPR050DC1**
58	50–58	812	17	30	37	37	55	—	—	40	50	**XTPR058DC1**
65	55–65	882	18.5	34	37	45	55	—	—	40	50	**XTPR063DC1**

Notes

Single-phasing sensitivity to IEC/EN 60947-4-1, VDE 0660 Part 102.

Can be snap-fit to IEC/EN 60715 top-hat (DIN) with 7.5 or 15 mm height.

Service Factor (SF)—Setting I_r of current scale in dependence of load factor:

$SF = 1.15 \rightarrow I_r = 1 \times I_{n\ mot}$

$SF = 1 \rightarrow I_r = 0.9 \times I_{n\ mot}$

For manual motor protective circuit breaker switching capacity, see **Page V5-T27-183**.

① Select manual motor protectors by full load amperes. Maximum motor ratings (kW, hp) are for reference only.

② In this range, calculate motor rating according to rated current. Specified values to NEC 430.6(A)(1).

Dimensions

Approximate Dimensions in mm [in]

Manual Motor Protectors—XTPB

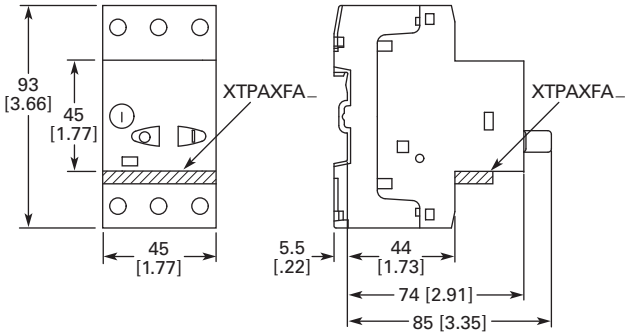

Manual Motor Protectors, Manual Transformer Protectors—XTPR...B

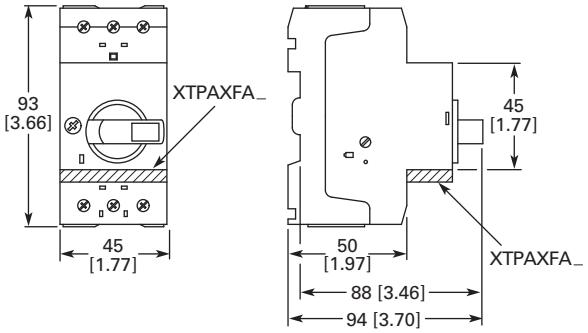

Manual Motor Protector—XTPR...DC1

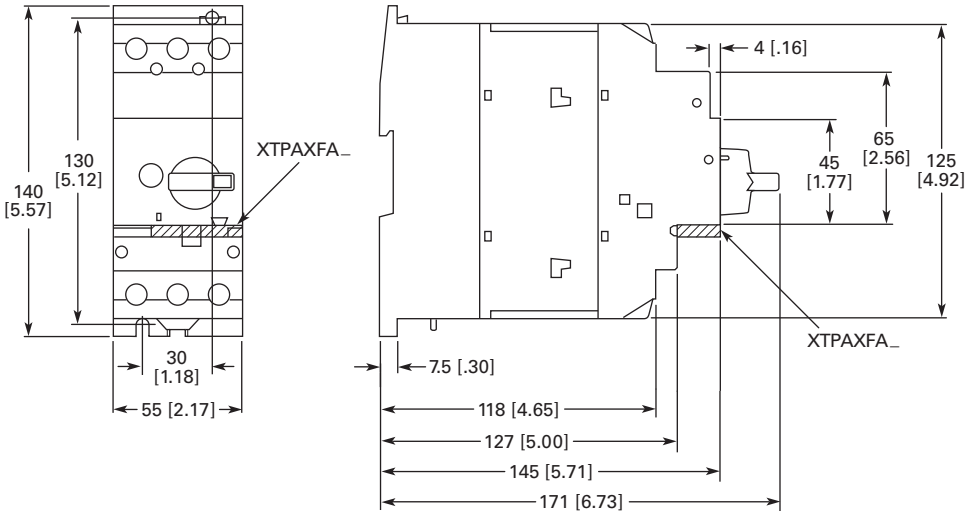

Current Limiter—XTPAXCL

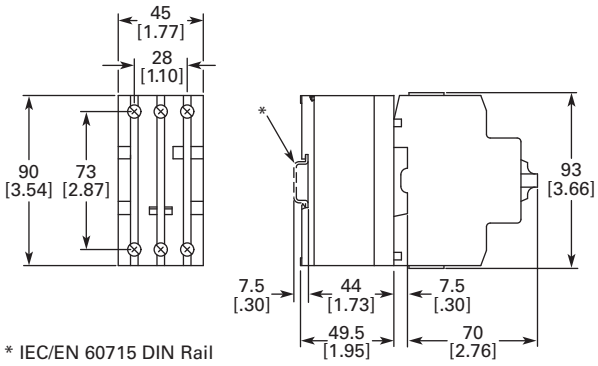

* IEC/EN 60715 DIN Rail
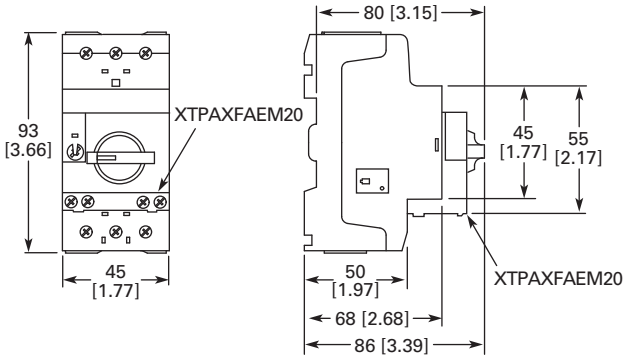
MMPs with Early-Make Auxiliary Contacts—XTPR...BC1 + XTPAXFAEM20