Overload Relays
Class 10
Fixed Heater

Overload Relay catalog numbers are shown in the shaded area in the **Overload Relay Selection and Data** table. To complete the catalog number, replace the asterisk (*) with the appropriate digit from the shaded area in the **Rating Selection** table.

Overload Relay Selection and Data

Class 10 Overload Relays							
	Direct Mount	Man./Auto Reset	RT1*	RT2*	RT3*	RT4* (1)	RT5* (2)
	Separate Mount	Man./Auto Reset	RT1* (3)	RT2* (4)	RT3*	RT4*	RT5*
For use with			5-25 hp contactors (CL00, CL01 CL02, CL25 CL04, CL45)	30-75 hp contactors (CL06, CL07 CL08, CL09 CL10)	100-125 hp contactors (CK75, CK08)	150-250 hp contactors (CK09, CK95)	300-500 hp contactors (CK10, CK11, CK12)
Type			3-pole, differential (phase unbalanced protection)				
Ambient Temperature			-25° to +68°C	-25° to +60°C			
Auxiliary Contacts			Two independent double break contacts (B600, Q600)				
Standards			VDE 0106 T100, VBG4				
Net Weight			7 oz.	13 oz.	2 lb.	5 lb. 5 oz.	2 lb.

(1) Used with Overload Jumpers: CKXJ02

(2) Used with Overload Jumpers: CKXJ11 or CKXJ10

(3) Used with Base Adapter: RTXP

(4) Used with Base Adapter: RT2XP

Selection and Dial Setting Guidelines

Motors with Service Factor of 1.15 or Greater

1. Select overload relay on the FLA as shown on the motor nameplate.
2. Adjust overload relay dial to the motor nameplate FLA.

Motors with Service Factor Less than 1.15

1. Select overload relay based on the following formula: FLA shown on the motor nameplate X 0.90. For example: if the Motor Service Factor is 1.0, then choose the overload based on the formula (FLA X 0.90).
2. Adjust overload relay dial to the result of the formula shown above.

REFERENCES

Trip Time Curves .....Page 49-50
Overload Jumpers.....Page 34

Instruction Sheet: RT1* GEH-6237
RT2* GEH-6238
RT3* GEH-6239
RT4* GEH-6240
RT5* GEH-6241
UL File Number.....E39584
CSA File Number LR45167

Rating Selection (Amperes)

RT1*			RT2*			RT3*			RT4*			RT5*			Current Range Suffix
Current Rating	Maximum Fuse Rating (Amperes)	Maximum Circuit Breaker Rating (Amperes)	Current Rating	Maximum Fuse Rating (Amperes)	Maximum Circuit Breaker Rating (Amperes)	Current Rating	Maximum Fuse Rating (Amperes)	Maximum Circuit Breaker Rating (Amperes)	Current Rating	Maximum Fuse Rating (Amperes)	Maximum Circuit Breaker Rating (Amperes)	Current Rating	Maximum Fuse Rating (Amperes)	Maximum Circuit Breaker Rating (Amperes)	
—	—	—	11.5-15	35	25	—	—	—	—	—	—	120-190	800	500	A
0.16-0.26	1	15	14.5-19	50	45	55-80	225	200	—	—	—	175-280	1200	700	B
0.25-0.41	1	15	18.5-25	70	60	63-90	250	225	—	—	—	250-400	1200	1000	C
0.4-.65	3	15	24-32	90	80	90-120	350	300	—	—	—	315-500	1200	1200	D
—	—	—	30-43	100	100	110-140	400	350	—	—	—	430-650	1200	1200	E
0.65-1.1	6	15	—	—	—	140-190	450	500	—	—	—	—	—	—	F
1-1.5	6	15	42-55	150	125	—	—	—	—	—	—	—	—	—	G
1.3-1.9	6	15	54-65	175	150	—	—	—	—	—	—	—	—	—	H
1.8-2.7	10	15	64-82	225	200	—	—	—	—	—	—	—	—	—	J
2.5-4.1	15	15	—	—	—	—	—	—	—	—	—	—	—	—	K
4-6.3	20	15	78-97	225	225	—	—	—	—	—	—	—	—	—	L
5.5-8.5	25	15	90-110	225	250	—	—	—	—	—	—	—	—	—	M
8-12	40	30	—	—	—	—	—	—	120-190	600	500	—	—	—	N
10-16	50	35	—	—	—	—	—	—	175-280	800	700	—	—	—	P
—	—	—	—	—	—	—	—	—	200-310	900	800	—	—	—	R
14.5-18	60	40	—	—	—	—	—	—	—	—	—	—	—	—	S
17.5-22	70	50	—	—	—	—	—	—	—	—	—	—	—	—	T
21-26	80	60	—	—	—	—	—	—	—	—	—	—	—	—	U
25-32	100	80	—	—	—	—	—	—	—	—	—	—	—	—	V
30-40	100	80	—	—	—	—	—	—	—	—	—	—	—	—	W

Overload Relays
Class 10
Fixed Heater

Engineering Outline Drawings

RT1+RTXP 55-215830
RT2+RT2XP.....55-215831
RT3 OLR.....55-215832
RT4 OLR.....55-215833
RT5 OLR.....55-215834

Dimensional Drawings for RT4 and RT5 are shown on page 29.

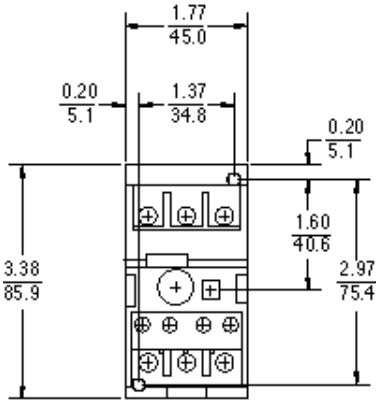

RT1 with RTXP Base Adapter - Front View

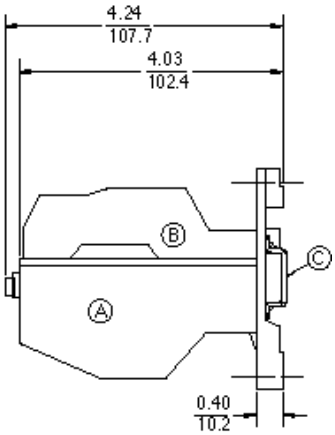

RT1 - Side View

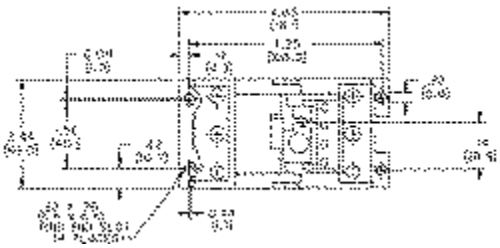

RT2 with RT2XP Base Adapter - Front View

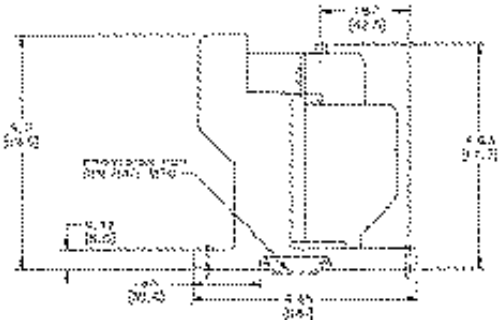

RT2 - Side View

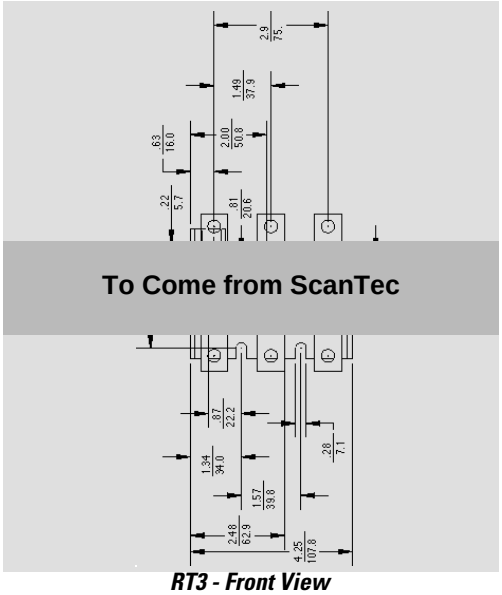

RT3 - Front View

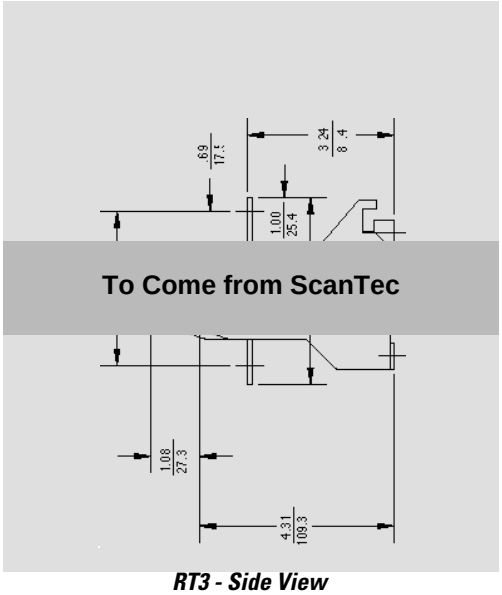

RT3 - Side View